SPF 系列三螺杆泵
Type Three-Spindle Screw Pump

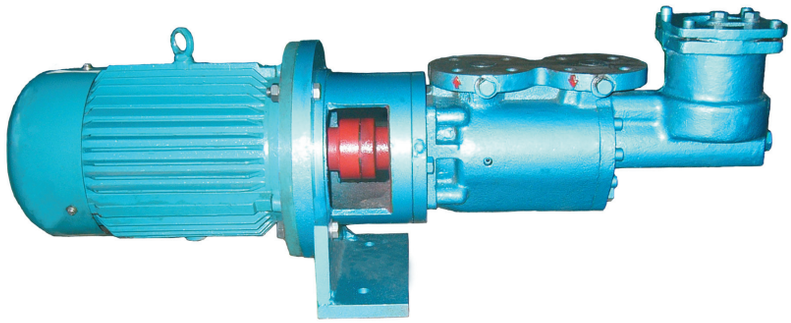

1.用途

适于输送燃料油，润滑油，液压油或其它润滑性液体，所输送介质中不得含有任何磨料颗粒和对泵材料有腐蚀性的物质。

2.主要应用范围

SPF 系列泵在燃油系统中用作输送，增压及燃油炉的燃油泵；在输油系统中可用作传输及加油泵；在一切工业领域中皆可用作润滑油泵，此外，也可用于各种液压传动装置中的液压泵。

3.结构

SPF 泵为内置轴承自吸三螺杆泵，经硬化处理的螺杆，装在一可更换的衬套内运转。主杆采用液压平衡，从杆的轴向力支撑在后盖上。并由液压力驱动旋转。因而螺杆型面仅传递液压扭矩，并不受力，也无磨损，对全部传动零件而言，均由被输送介质润滑。

主杆的径向由平衡活塞定位，且借助于平衡活塞和轴套的间隙使高压腔和密封腔分开，在密封腔内装有机械密封，腔内的油液回油孔与泵的吸入腔相通，因而不受排出压力的影响。

泵由支架、联轴器与电机联接和驱动，（如规格 20 型），亦可壁式安装（如规格 40 型）。

4.运转

由特殊型线构成的螺旋型面的主动螺杆转动时，其动密封腔室将把液体由吸入口吸入并沿轴向连续、无脉动的输送到排出口。

5.噪音 / 脉动

螺杆泵的结构和运转的稳定性，保证了泵的低噪音和无脉动。

1.Use

For the delivery of fuel oils,lube oils,hydraulic oils or other lubricating liquids. The delivery media must not contain any abrasive particles nor chemically attack the pump materials.

2.Main fields of application

SPF pumps operate as transfer, booster and burner operation pumps in fuel oil engineering, as transfer and filling pumps in tank farms as well as lube-oil pumps in any industrial branches.They are moreover used for pressure generation in oil-hydraulic plants of all kinds.

3.Design

Self-priming three-screw type of pump with internal bearing. The hardened and ground screws run in an exchangeable casing insert.

The driving screw is hydraulically balanced. The axial thrust of the working screw is absorbed by the endside pump cover Their drive is hydraulic.The thread flanks merely transmit the torque resulting form the liquid friction.Thus,the thread flanks are practically stress-free and not subject to any wear. All sliding parts are lubricated by the delivery medium being within the range of full liquid friction.

The radial and axial bearing of the driving screw is by the balancing piston guided in the bearing ring. Simultaneously, the gap between balancing piston and bearing rings separates the pressure chamber from the sealing chamber. A maintenance-free mechanical seal is provided as the shaft sealing.

Sealing chamber and suction chamber are interconnected by way of a return gallery. Thus, independently of the delivery pressure at the shaft sealing, only the suction pressure becomes effective.

Complete units being supplied, the connection pump/driving motor is by a pump connector with bracket (sizes 20) or by a wall/foot bracket resp. (size 40)

4.Operation

Owing to a special profiling of the thread flanks,the three screws from sealed chambers the contents of which are axially and completely continuosly shifted from the suction to the pump side of the pump as the screws turn. There will be no turbulence in spite of the screw rotation. The constant chamber volume excludes squeezing.

5.Noise/pulsation

The structural design and operation of the screw pump ensure a very low noise level and almost pulsation-free delivery.

6.轴封

泵采用机械密封,该机械密封无需维修。

结构材料

动环	浸渍树脂石墨
静环	高碳铬钢
“O”型圈	氟橡胶
弹簧	不锈钢
金属元件	不锈钢

7.温度和压力范围

允许温度 150℃①

允许工作压力 4.0Mpa

允许进口工作压力 1.0Mpa

①有关更高的使用温度请与厂协商。

②不同粘度,转速下的工作压力,按性能参数表格。

8.安全阀

每台泵均装有安全阀作为超载保护装置。

9.进出口法兰

进口法兰:PN16DIN2533(GB2555-81)

出口法兰:PN40DIN2535(GB2555-81)

10.安装

SPF 泵在任何地方皆可安装使用,为了安全起见,唯电机不允许摆放在泵的下面。

11.动力配置

各种型式的电动机或其它驱动装置通过联轴器与泵进行联接。

三相交流电机,其防护等级为 IP44,绝缘等级为 B、功率及主要联接尺寸均按 Y 系列电机。

电机规定频率为 50HZ,若无其它变化可用在 60HZ 电源下工作。

6.Shaft sealing

By means of a maintenance - free mechanical seal of the unbalanced type.

Material disigh:

Rotary seal ring	Hard carbon metal-impregnated
Staionary seal ring	Cast steel
Bellow,gasket	Viton
Spring	High-quality steel
Metal parts	Steel phosphatized

7.Temperature and pressure limits

Admissible temperature 150℃

Admissible delivery pressure 4.0Mpa

Admissible supply pressure 1.0Mpa

8.Pressure relief valves

As an overload protection, installed in each pump is a pressure relief valve

9.Flanges/Connections

Flanges

Suction side:PN 16, DIN2533(GB2555-81)

Delivery side:PN 40, DIN2335(GB2555-81)

10.Installation

SPF pumps may be mounted in any position. For safety purposes, the arrangement with "motor downwards" is not admissible.

11.Drive/Coupling

By way of an intermediate connector, electric motors of the most varied disigns or other prime movers can be connected with the pump Normally, the following are provided;

Surface-cooled three-phase spuirrel-cage motors, enclosre IP44 according to IEC Standards.

Class B insulation, performances and main dimensions according to Yseries motor.

Motorsrated for 50HZ may without any change also be operated form 60HZ supply systems.

12.Model code

12.型式代号

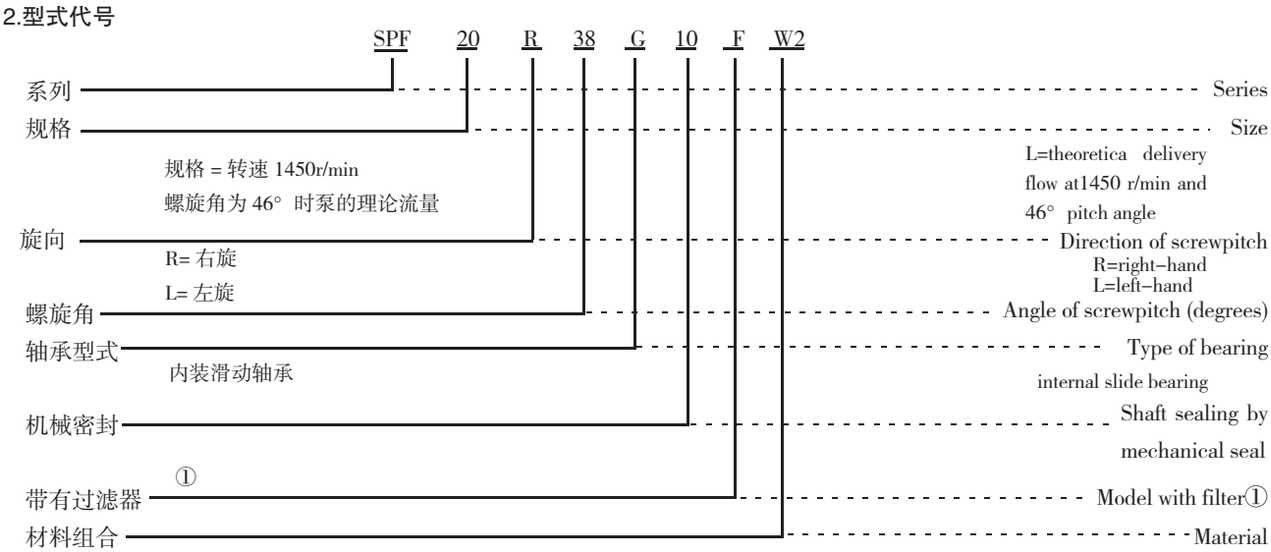

①仅供应 20 型一个规格

①available at extra charge with 20 only

SPF20 规格性能参数表 Performance tabe Data for Size 20

转速 转/分 speed r/min	泵规格 pump size	压力 兆帕 Delivery pressure MPa	运动粘度 mm²/s 或恩氏粘度(° E)Kinematic viscosity mm²/s(° E)															
			3 (1.2)		6 (1.5)		12 (2)		40 (5)		75 (10)		150 (20)		380 (50)		750 (100)	
			流量 Q 升/分 L/min	轴功率 P 升瓦 KW	流量 Q 升/分 L/min	轴功率 P 升瓦 KW	流量 Q 升/分 L/min	轴功率 P 升瓦 KW	流量 Q 升/分 L/min	轴功率 P 升瓦 KW	流量 Q 升/分 L/min	轴功率 P 升瓦 KW	流量 Q 升/分 L/min	轴功率 P 升瓦 KW	流量 Q 升/分 L/min	轴功率 P 升瓦 KW	流量 Q 升/分 L/min	轴功率 P 升瓦 KW
2900	20-38	0.5	28.1	0.48	28.9	0.48	29.4	0.48	29.9	0.48	30.1	0.56	30.2	0.70	30.3	0.96	30.4	1.24
		1.0	26.2	0.73	27.6	0.73	28.4	0.73	29.4	0.73	29.7	0.81	30.0	0.95	30.2	1.21	30.3	1.49
		1.5	24.4	0.98	26.4	0.98	27.5	0.98	28.9	0.98	29.4	1.06	29.7	1.20	30.0	1.46	30.2	1.74
		2.0	22.6	1.23	25.3	1.23	26.7	1.23	28.4	1.23	29.0	1.31	29.5	1.45	29.9	1.71	30.1	1.99
		2.5	21.0	1.48	24.2	1.48	25.9	1.48	27.9	1.48	28.7	1.56	29.2	1.70	29.7	1.96	30.0	2.24
		3.0	19.4	1.73	23.1	1.73	25.1	1.73	27.5	1.73	28.4	1.81	29.0	1.95	29.6	2.21	29.9	2.49
		3.5	17.8	1.98	22.1	1.98	24.3	1.98	27.1	1.98	28.1	2.06	28.8	2.20	29.5	2.46	29.8	2.74
		4.0	16.3	2.23	21.0	2.23	23.6	2.23	26.7	2.23	27.8	2.31	28.6	2.45	29.3	2.71	29.7	2.99
	20-46	0.5	37.4	0.56	38.4	0.56	38.9	0.56	39.5	0.56	39.8	0.64	39.9	0.78	40.1	1.04	40.2	1.32
		1.0	35.0	0.89	36.8	0.89	37.7	0.89	38.9	0.89	39.3	0.97	39.6	1.11	39.9	1.37	40.0	1.65
		1.5	32.8	1.22	35.3	1.22	36.7	1.22	38.3	1.22	38.9	1.30	39.3	1.44	39.7	1.70	39.3	1.98
		2.0	30.7	1.55	33.9	1.55	35.6	1.55	37.7	1.55	38.5	1.63	39.0	1.77	39.5	2.03	39.8	2.31
		2.5	28.6	1.88	32.5	1.88	34.6	1.88	37.2	1.88	38.1	1.96	38.7	2.10	39.4	2.36	39.6	2.64
		3.0	26.7	2.21	31.2	2.21	33.7	2.21	36.6	2.21	37.7	2.29	38.5	2.43	39.2	2.69	39.5	2.97
		3.5	24.8	2.54	29.9	2.54	32.8	2.54	36.1	2.54	37.3	2.62	38.2	2.76	39.0	3.02	39.4	3.30
		4.0	22.9	2.87	28.7	2.87	31.8	2.87	35.6	2.87	37.0	2.95	38.0	3.09	38.9	3.35	39.3	3.63
	20-56	0.5	52.5	0.69	53.8	0.69	54.5	0.69	55.3	0.69	55.6	0.77	55.8	0.91	56.0	1.17	56.1	1.45
		1.0	49.4	1.15	51.7	1.15	53.0	1.15	54.5	1.15	55.0	1.23	55.4	1.37	55.8	1.63	55.9	1.91
		1.5	46.6	1.61	49.8	1.61	51.6	1.61	53.7	1.61	54.5	1.69	55.0	1.84	55.5	2.09	55.8	2.37
		2.0	43.9	2.07	48.0	2.07	50.3	2.07	52.9	2.07	53.9	2.15	54.6	2.30	55.3	2.55	55.6	2.83
		2.5	41.3	2.53	46.3	2.53	49.0	2.53	52.2	2.53	53.4	2.62	54.3	2.76	55.1	3.01	55.4	3.29
		3.0	38.7	2.99	44.6	2.99	47.8	2.99	51.5	2.99	52.9	3.08	53.9	3.22	54.9	3.47	55.3	3.76
		3.5			43.0	3.45	46.6	3.45	50.9	3.45	52.5	3.54	53.6	3.68	54.6	3.93	55.1	4.22
		4.0			41.4	3.91	45.4	3.91	50.2	3.91	52.0	4.00	53.3	4.14	54.4	4.39	55.0	4.68
1450	20-38	0.5	12.8	0.21	13.6	0.21	14.1	0.21	14.6	0.21	14.8	0.24	14.9	0.29	15.0	0.38	15.1	0.48
		1.0	10.9	0.33	12.3	0.33	13.1	0.33	14.1	0.33	14.4	0.36	14.7	0.41	14.9	0.50	15.0	0.60
		1.5	9.1	0.46	11.1	0.46	12.2	0.46	13.6	0.46	14.1	0.49	14.4	0.54	14.7	0.63	14.9	0.73
		2.0	7.3	0.58	10.0	0.58	11.4	0.58	13.1	0.58	13.7	0.61	14.2	0.66	14.6	0.75	14.8	0.85
		2.5	5.7	0.71	8.9	0.71	10.6	0.71	12.6	0.71	13.4	0.74	13.9	0.79	14.4	0.88	14.7	0.98
		3.0	4.1	0.83	7.8	0.83	9.8	0.83	12.2	0.83	13.1	0.86	13.7	0.91	14.3	1.00	14.6	1.10
		3.5			6.8	0.96	9.0	0.96	11.8	0.96	12.8	0.99	13.5	1.04	14.2	1.13	14.5	1.23
		4.0			5.7	1.08	8.3	1.08	11.4	1.08	12.5	1.11	13.3	1.16	14.0	1.25	14.4	1.35
	20-46	0.5	17.2	0.25	18.2	0.25	18.7	0.25	19.3	0.25	19.6	0.28	19.7	0.33	19.9	0.42	20.0	0.52
		1.0	14.8	0.41	16.6	0.41	17.5	0.41	18.7	0.41	19.1	0.44	19.4	0.49	19.7	0.58	19.8	0.68
		1.5	12.6	0.58	15.1	0.58	16.5	0.58	18.1	0.58	18.7	0.61	19.1	0.66	19.5	0.75	19.7	0.85
		2.0	10.5	0.74	13.7	0.74	15.4	0.74	17.5	0.74	18.3	0.77	18.8	0.82	19.3	0.91	19.6	1.01
		2.5	8.4	0.91	12.3	0.91	14.4	0.91	17.0	0.91	17.9	0.94	18.5	0.99	19.2	1.08	19.4	1.18
		3.0	6.5	1.07	11.0	1.07	13.5	1.07	16.4	1.07	17.5	1.10	18.3	1.15	19.0	1.24	19.3	1.34
		3.5			9.7	1.24	12.6	1.24	15.9	1.24	17.1	1.27	18.0	1.32	18.8	1.41	19.2	1.51
		4.0			8.5	1.40	11.6	1.40	15.4	1.40	16.8	1.43	17.8	1.48	18.7	1.57	19.1	1.67
	20-56	0.5	24.3	0.31	25.6	0.31	26.3	0.31	27.1	0.31	27.4	0.34	27.6	0.39	27.8	0.48	27.9	0.58
		1.0	21.2	0.54	23.5	0.54	24.8	0.54	26.3	0.54	26.8	0.57	27.2	0.62	27.6	0.71	27.7	0.81
		1.5	18.4	0.77	21.6	0.77	23.4	0.77	25.5	0.77	26.3	0.80	26.8	0.85	27.3	0.94	27.6	1.04
		2.0	15.7	1.00	19.8	1.00	22.1	1.00	24.7	1.00	25.7	1.03	26.4	1.08	27.1	1.17	27.4	1.27
		2.5			18.1	1.23	20.8	1.23	24.0	1.23	25.2	1.26	26.1	1.31	26.9	1.40	27.2	1.50
		3.0			16.4	1.46	19.6	1.46	23.3	1.46	24.7	1.49	25.7	1.54	26.7	1.63	27.1	1.73
		3.5							22.7	1.69	24.3	1.72	25.4	1.77	26.4	1.86	26.9	1.96
		4.0							22.0	1.92	23.8	1.95	25.1	2.00	26.2	2.09	26.8	2.19

△灰色为不推荐区 The area of this color is not recommend able.

SPF20 规格性能参数表 Performance tabe Data for Size 20

转速 转/分 speed r/min	泵规格 pump size	压力 兆帕 Delivery pressure MPa	运动粘度 mm²/s 或恩氏粘度(° E)Kinematic viscosity mm²/s(° E)															
			3 (1.2)		6 (1.5)		12 (2)		40 (5)		75 (10)		150 (20)		380 (50)		750 (100)	
			流量 Q 升/分 L/min	轴功率 P 升瓦 KW	流量 Q 升/分 L/min	轴功率 P 升瓦 KW	流量 Q 升/分 L/min	轴功率 P 升瓦 KW	流量 Q 升/分 L/min	轴功率 P 升瓦 KW	流量 Q 升/分 L/min	轴功率 P 升瓦 KW	流量 Q 升/分 L/min	轴功率 P 升瓦 KW	流量 Q 升/分 L/min	轴功率 P 升瓦 KW	流量 Q 升/分 L/min	轴功率 P 升瓦 KW
950	20-38	0.5	7.5	0.12	8.4	0.12	8.8	0.12	9.3	0.12	9.5	0.14	9.6	0.17	9.8	0.21	9.8	0.27
		1.0	5.6	0.21	7.0	0.21	7.8	0.21	8.8	0.21	9.1	0.22	9.4	0.25	9.6	0.30	9.7	0.35
		1.5	3.8	0.29	5.8	0.29	7.0	0.29	8.3	0.29	8.8	0.30	9.1	0.33	9.4	0.38	9.6	0.43
		2.0	2.1	0.37	4.7	0.37	6.1	0.37	7.8	0.37	8.4	0.39	8.9	0.41	9.3	0.46	9.5	0.51
		2.5			3.6	0.45	5.3	0.45	7.4	0.45	8.1	0.47	8.7	0.49	9.2	0.54	9.4	0.60
		3.0			2.5	0.53	4.5	0.53	6.9	0.53	7.8	0.55	8.5	0.58	9.0	0.62	9.3	0.68
		3.5					3.8	0.62	6.5	0.62	7.5	0.63	8.2	0.66	8.9	0.71	9.2	0.76
		4.0					3.0	0.70	6.1	0.70	7.2	0.71	8.0	0.74	8.7	0.79	9.1	0.84
	20-46	0.5	10.2	0.15	11.2	0.15	11.7	0.15	12.4	0.15	12.6	0.17	12.8	0.19	12.9	0.24	13.0	0.29
		1.0	7.8	0.26	9.6	0.26	10.6	0.26	11.7	0.26	12.1	0.27	12.4	0.30	12.7	0.35	12.9	0.40
		1.5	5.6	0.37	8.1	0.37	9.5	0.37	11.1	0.37	11.7	0.38	12.1	0.41	12.5	0.46	12.7	0.51
		2.0	3.5	0.48	6.7	0.48	8.5	0.48	10.5	0.48	11.3	0.49	11.9	0.52	12.4	0.57	12.6	0.62
		2.5			5.4	0.58	7.5	0.58	10.0	0.58	10.9	0.60	11.6	0.63	12.2	0.67	12.5	0.73
		3.0			4.1	0.69	6.5	0.69	9.4	0.69	10.5	0.71	11.3	0.73	12.0	0.78	12.3	0.83
		3.5					5.6	0.80	8.9	0.80	10.2	0.82	11.0	0.84	11.9	0.89	12.2	0.94
		4.0					4.7	0.91	8.4	0.91	9.8	0.92	10.8	0.95	11.7	1.00	12.1	1.05
	20-56	0.5	14.6	0.19	15.9	0.19	16.6	0.19	17.4	0.19	17.7	0.21	17.9	0.24	18.1	0.28	18.2	0.34
		1.0	11.5	0.34	13.8	0.34	15.1	0.34	16.5	0.34	17.1	0.36	17.5	0.39	17.8	0.43	18.0	0.49
		1.5	8.7	0.50	11.9	0.50	13.7	0.50	15.8	0.50	16.5	0.51	17.1	0.54	17.6	0.59	17.8	0.64
		2.0	6.0	0.65	10.1	0.65	12.4	0.65	15.0	0.65	16.0	0.66	16.7	0.69	17.4	0.74	17.7	0.79
		2.5					11.1	0.80	14.3	0.80	15.5	0.81	16.4	0.84	17.1	0.89	17.5	0.94
		3.0					9.9	0.95	13.6	0.95	15.0	0.96	16.0	0.99	16.9	1.04	17.4	1.09
		3.5							12.9	1.10	14.5	1.12	15.7	1.14	16.7	1.19	17.2	1.24
		4.0							12.3	1.25	14.1	1.27	15.3	1.29	16.5	1.34	17.1	1.39
3400	20-38	0.5	33.4	0.58	34.2	0.58	34.6	0.58	35.2	0.58	35.4	0.69	35.5	0.87	35.6	1.19	35.7	1.55
		1.0	31.4	0.87	32.9	0.87	33.7	0.87	34.6	0.87	35.0	0.98	35.2	1.16	35.5	1.48	35.6	1.84
		1.5	29.6	1.17	31.7	1.17	32.8	1.17	34.1	1.17	34.6	1.27	35.0	1.45	35.3	1.78	35.5	2.14
		2.0	27.9	1.46	30.5	1.46	32.0	1.46	33.7	1.46	34.3	1.57	34.7	1.75	35.1	2.07	35.4	2.43
		2.5	26.3	1.75	29.4	1.75	31.2	1.75	33.2	1.75	34.0	1.86	34.5	2.04	35.0	2.36	35.3	2.72
		3.0	24.7	2.05	28.4	2.05	30.4	2.05	32.8	2.05	33.7	2.15	34.3	2.33	34.9	2.66	35.2	3.02
		3.5	23.1	2.34	27.3	2.34	29.6	2.34	32.4	2.34	33.4	2.45	34.1	2.63	34.7	2.95	35.1	3.31
		4.0	21.6	2.63	26.3	2.63	28.9	2.63	31.9	2.63	33.1	2.74	33.9	2.92	34.6	3.24	35.0	3.60
	20-46	0.5	44.3	0.67	45.3	0.67	45.9	0.67	46.5	0.67	46.7	0.78	46.9	0.96	47.1	1.28	47.1	1.64
		1.0	41.9	1.06	43.7	1.06	44.7	1.06	45.9	1.06	46.3	1.17	46.6	1.35	46.9	1.67	47.0	2.03
		1.5	39.7	1.45	42.3	1.45	43.6	1.45	45.2	1.45	45.9	1.56	46.3	1.74	46.7	2.06	46.9	2.42
		2.0	37.6	1.84	40.8	1.84	42.6	1.84	44.7	1.84	45.4	1.94	46.0	2.12	46.5	2.45	46.7	2.81
		2.5	35.6	2.22	39.5	2.22	41.6	2.22	44.1	2.22	45.1	2.33	45.7	2.51	46.3	2.83	46.6	3.19
		3.0	33.6	2.61	38.2	2.61	40.7	2.61	43.6	2.61	44.7	2.72	45.4	2.90	46.2	3.22	46.5	3.58
		3.5	31.7	3.00	36.9	3.00	39.7	3.00	43.1	3.00	44.3	3.10	45.2	3.28	46.0	3.61	46.4	3.97
		4.0	29.8	3.38	35.7	3.38	38.8	3.38	42.5	3.38	43.9	3.49	44.9	3.67	45.8	3.99	46.2	4.35
	20-56	0.5	62.2	0.83	63.5	0.83	64.2	0.83	65.0	0.83	65.3	0.94	65.6	1.11	65.8	1.44	65.8	1.80
		1.0	59.2	1.37	61.5	1.37	62.7	1.37	64.2	1.37	64.7	1.48	65.1	1.66	65.5	1.98	65.7	2.34
		1.5	56.3	1.91	59.6	1.91	61.3	1.91	63.4	1.91	64.2	2.02	64.7	2.20	65.2	2.52	65.5	2.88
		2.0	53.6	2.45	57.8	2.45	60.0	2.45	62.7	2.45	63.7	2.56	64.4	2.74	65.0	3.06	65.3	3.42
		2.5	51.0	2.99	56.0	2.99	58.7	2.99	62.0	2.99	63.2	3.10	64.0	3.28	64.8	3.60	65.2	3.96
		3.0	48.5	3.53	54.4	3.53	57.5	3.53	61.3	3.53	62.7	3.64	63.7	3.82	64.6	4.14	65.0	4.50
		3.5			52.7	4.07	56.3	4.07	60.6	4.07	62.2	4.18	63.3	4.36	64.4	4.68	64.9	5.04
		4.0			51.1	4.61	55.1	4.61	59.9	4.61	61.7	4.72	63.0	4.90	64.2	5.22	64.7	5.58

△灰色为不推荐区 The area of this color is not recommend able.

SPF40 规格性能参数表 Performance tabe Data for Size 40

转速 转/分 speed r/min	泵规格 pump size	压力 兆帕 Delivery pressure MPa	运动粘度 mm²/s 或恩氏粘度(° E)Kinematic viscosity mm²/s(° E)															
			3 (1.2)		6 (1.5)		12 (2)		40 (5)		75 (10)		150 (20)		380 (50)		750 (100)	
			流量 Q 升/分 L/min	轴功率 P 升瓦 KW	流量 Q 升/分 L/min	轴功率 P 升瓦 KW	流量 Q 升/分 L/min	轴功率 P 升瓦 KW	流量 Q 升/分 L/min	轴功率 P 升瓦 KW	流量 Q 升/分 L/min	轴功率 P 升瓦 KW	流量 Q 升/分 L/min	轴功率 P 升瓦 KW	流量 Q 升/分 L/min	轴功率 P 升瓦 KW	流量 Q 升/分 L/min	轴功率 P 升瓦 KW
1750	20-38	0.5	15.9	0.26	16.7	0.26	17.1	0.26	17.6	0.26	17.9	0.29	18.0	0.36	18.1	0.48	18.2	0.61
		1.0	13.9	0.41	15.4	0.41	16.2	0.41	17.1	0.41	17.5	0.44	17.6	0.51	17.9	0.63	18.0	0.76
		1.5	12.1	0.56	14.2	0.56	15.3	0.56	16.6	0.56	17.1	0.59	17.5	0.66	17.8	0.78	17.9	0.91
		2.0	10.4	0.71	13.0	0.71	14.5	0.71	16.2	0.71	16.8	0.74	17.2	0.81	17.6	0.93	17.8	1.06
		2.5	8.7	0.86	11.9	0.86	13.7	0.86	15.7	0.86	16.5	0.89	17.0	0.96	17.5	1.08	17.7	1.21
		3.0	7.1	1.01	10.9	1.01	12.9	1.01	15.3	1.01	16.2	1.04	16.8	1.11	17.3	1.23	17.6	1.36
		3.5	5.6	1.16	9.8	1.16	12.1	1.16	14.8	1.16	15.8	1.19	16.6	1.26	17.2	1.38	17.5	1.51
		4.0	4.1	1.31	8.8	1.31	11.4	1.31	14.4	1.31	15.6	1.34	16.4	1.41	17.1	1.53	17.4	1.66
	20-46	0.5	21.2	0.30	22.2	0.30	22.7	0.30	23.4	0.30	23.6	0.34	23.8	0.14	23.9	0.53	24.0	0.66
		1.0	18.8	0.50	20.6	0.50	21.6	0.50	22.7	0.50	23.2	0.54	23.5	0.61	23.7	0.72	23.9	0.86
		1.5	16.6	0.70	19.1	0.70	20.5	0.70	22.1	0.70	22.7	0.74	23.2	0.80	23.5	0.92	23.7	1.05
		2.0	14.5	0.90	17.7	0.90	19.5	0.90	21.5	0.90	22.3	0.94	22.9	1.00	23.4	1.12	23.6	1.25
		2.5	12.5	1.10	16.4	1.10	18.5	1.10	21.0	1.10	21.9	1.14	22.6	1.20	23.2	1.32	23.5	1.45
		3.0	10.5	1.29	15.1	1.29	17.5	1.29	20.5	1.29	21.5	1.33	22.3	1.40	23.0	1.52	23.4	1.65
		3.5			13.8	1.49	16.6	1.49	19.9	1.49	21.2	1.53	22.0	1.60	22.9	1.72	23.2	1.85
		4.0			12.5	1.69	15.7	1.69	19.4	1.69	20.8	1.73	21.8	1.80	22.7	1.91	23.1	2.04
	20-56	0.5	30.0	0.38	31.2	0.38	31.9	0.38	32.7	0.38	33.1	0.42	33.3	0.49	33.5	0.61	33.6	0.74
		1.0	26.9	0.66	29.2	0.66	30.4	0.66	31.9	0.66	32.5	0.70	32.8	0.76	33.2	0.88	33.4	1.01
		1.5	24.0	0.93	27.3	0.93	29.0	0.93	31.1	0.93	31.9	0.97	32.5	1.04	33.0	1.16	33.2	1.29
		2.0	21.3	1.21	25.5	1.21	27.7	1.21	30.4	1.21	31.4	1.25	32.1	1.32	32.7	1.43	33.0	1.57
		2.5			23.7	1.49	26.5	1.49	29.7	1.49	30.9	1.53	31.7	1.59	32.5	1.71	32.9	1.84
		3.0			22.1	1.76	25.2	1.76	29.0	1.76	30.4	1.80	31.4	1.87	32.3	1.99	32.7	2.12
		3.5							28.3	2.04	29.9	2.08	31.0	2.15	32.1	2.26	32.6	2.40
		4.0							27.7	2.32	29.4	2.36	30.7	2.42	31.9	2.54	32.4	2.67
1140	20-38	0.5	9.5	0.15	10.4	0.15	10.8	0.15	11.3	0.15	11.5	0.17	11.7	0.21	11.8	0.27	11.8	0.34
		1.0	7.6	0.25	9.1	0.25	9.8	0.25	10.8	0.25	11.1	0.27	11.4	0.31	11.6	0.37	11.7	0.44
		1.5	5.8	0.35	7.8	0.35	9.0	0.35	10.3	0.35	10.8	0.37	11.1	0.41	11.4	0.47	11.6	0.54
		2.0	4.1	0.45	6.7	0.45	8.1	0.45	9.8	0.45	10.5	0.47	10.9	0.50	11.3	0.57	11.5	0.64
		2.5	2.4	0.55	5.6	0.55	7.3	0.55	9.4	0.55	10.1	0.57	10.7	0.60	11.2	0.67	11.4	0.74
		3.0			4.5	0.65	6.5	0.65	8.9	0.65	9.8	0.67	10.5	0.70	11.0	0.76	11.3	0.83
		3.5			3.5	0.74	5.8	0.74	8.5	0.74	9.5	0.76	10.2	0.80	10.9	0.86	11.2	0.93
		4.0			2.5	0.84	5.0	0.84	8.1	0.84	9.2	0.86	10.0	0.90	10.7	0.96	11.1	1.03
	20-46	0.5	12.9	0.19	13.8	0.19	14.4	0.19	15.0	0.19	15.3	0.21	15.4	0.24	15.6	0.30	15.7	0.37
		1.0	10.5	0.32	12.2	0.32	13.2	0.32	14.4	0.32	14.8	0.34	15.1	0.37	15.4	0.43	15.5	0.50
		1.5	8.2	0.45	10.8	0.45	12.1	0.45	13.8	0.45	14.4	0.47	14.8	0.50	15.2	0.56	15.4	0.63
		2.0	6.1	0.57	9.4	0.57	11.1	0.57	13.2	0.57	14.0	0.60	14.5	0.63	15.0	0.69	15.2	0.76
		2.5	4.1	0.70	8.0	0.70	10.1	0.70	12.6	0.70	13.6	0.73	14.2	0.76	14.8	0.82	15.1	0.89
		3.0			6.7	0.83	9.2	0.83	12.1	0.83	13.2	0.86	14.0	0.89	14.7	0.95	15.0	1.02
		3.5					8.2	0.96	11.6	0.96	12.8	0.99	13.7	1.02	14.5	1.08	14.9	1.15
		4.0					7.3	1.09	11.1	1.09	12.5	1.11	13.4	1.15	14.3	1.21	14.8	1.28
	20-56	0.5	18.3	0.24	19.6	0.24	20.3	0.24	21.1	0.24	21.4	0.26	21.6	0.29	21.8	0.36	21.9	0.43
		1.0	15.2	0.42	17.5	0.42	18.8	0.42	20.2	0.42	20.8	0.44	21.2	0.47	21.5	0.54	21.7	0.61
		1.5	12.4	0.60	15.6	0.60	17.4	0.60	19.5	0.60	20.2	0.62	20.8	0.66	21.3	0.72	21.5	0.79
		2.0	9.7	0.78	13.8	0.78	16.1	0.78	18.7	0.78	19.7	0.80	20.4	0.84	21.1	0.90	21.4	0.97
		2.5					14.8	0.96	18.0	0.96	19.2	0.98	20.1	1.02	20.8	1.08	21.1	1.15
		3.0					13.6	1.14	17.3	1.14	18.7	1.16	19.7	1.20	20.6	1.26	21.1	1.33
		3.5							16.6	1.32	18.2	1.34	19.4	1.38	20.4	1.44	20.9	1.51
		4.0							16.0	1.51	17.8	1.53	19.0	1.56	20.2	1.62	20.8	1.69

△灰色为不推荐区 The area of this color is not recommend able.

SPF40 规格性能参数表 Performance tabe Data for Size40

转速 转/分 speed r/min	泵规格 pump size	压力 兆帕 Delivery pressure MPa	运动粘度 mm²/s 或恩氏粘度(° E)Kinematic viscosity mm²/s(° E)															
			3 (1.2)		6 (1.5)		12 (2)		40 (5)		75 (10)		150 (20)		380 (50)		750 (100)	
			流量 Q 升/分 L/min	轴功率 P 升瓦 KW	流量 Q 升/分 L/min	轴功率 P 升瓦 KW	流量 Q 升/分 L/min	轴功率 P 升瓦 KW	流量 Q 升/分 L/min	轴功率 P 升瓦 KW	流量 Q 升/分 L/min	轴功率 P 升瓦 KW	流量 Q 升/分 L/min	轴功率 P 升瓦 KW	流量 Q 升/分 L/min	轴功率 P 升瓦 KW	流量 Q 升/分 L/min	轴功率 P 升瓦 KW
2900	40-38	0.5	59.3	0.83	60.5	0.83	61.2	0.83	61.9	0.83	62.2	0.94	62.5	1.11	62.6	1.48	62.7	1.84
		1.0	56.3	1.34	58.5	1.34	59.7	1.34	61.1	1.34	61.7	1.45	62.0	1.62	62.4	1.99	62.5	2.36
		1.5	53.6	1.86	56.7	1.86	58.4	1.86	60.4	1.86	61.1	1.97	61.7	2.14	62.2	2.51	62.4	2.87
		2.0	51.0	2.37	55.0	2.37	57.1	2.37	59.7	2.37	60.6	2.48	61.3	2.65	61.9	3.02	62.2	3.39
		2.5	48.4	2.89	53.3	2.89	55.9	2.89	59.0	2.89	60.1	3.00	61.0	3.17	61.7	3.54	62.1	3.90
		3.0	46.0	3.40	51.7	3.40	54.7	3.40	58.3	3.40	59.7	3.51	60.6	3.68	61.5	4.05	61.9	4.42
		3.5	43.6	3.92	50.1	3.92	53.6	3.92	57.7	3.92	59.2	4.03	60.3	4.20	61.3	4.57	61.8	4.93
		4.0	41.3	4.43	48.5	4.43	52.4	4.43	57.0	4.43	58.8	4.54	60.0	4.71	61.1	5.08	61.6	5.45
	40-46	0.5	79.4	1.00	80.9	1.00	81.7	1.00	82.7	1.00	83.1	1.11	83.3	1.28	83.6	1.65	83.7	2.02
		1.0	75.8	1.68	78.5	1.68	80.0	1.68	81.7	1.68	82.4	1.80	82.8	1.97	83.3	2.33	83.5	2.70
		1.5	72.4	2.37	76.2	2.37	78.3	2.37	80.8	2.37	81.7	2.48	82.4	2.65	83.0	3.02	83.2	3.39
		2.0	69.2	3.06	74.1	3.06	76.8	3.06	79.9	3.06	81.1	3.17	81.9	3.34	82.7	3.71	83.1	4.08
		2.5	66.1	3.74	72.0	3.74	75.3	3.74	79.1	3.74	80.5	3.86	81.5	4.03	82.4	4.39	82.9	4.76
		3.0	63.1	4.43	70.0	4.43	73.8	4.43	78.3	4.43	79.9	4.54	81.1	4.71	82.2	5.08	82.7	5.45
		3.5	60.2	5.12	68.1	5.12	72.4	5.12	77.5	5.12	79.4	5.23	80.7	5.40	81.9	5.77	82.5	6.13
		4.0	57.3	5.80	66.2	5.80	71.0	5.80	76.7	5.80	78.8	5.92	80.3	6.09	81.7	6.45	82.3	6.82
	40-54	0.5	107.1	1.23	108.9	1.23	110.0	1.23	111.2	1.23	111.7	1.35	112.0	1.52	112.3	1.88	112.4	2.25
		1.0	102.5	2.15	105.9	2.15	107.7	2.15	109.9	2.15	110.8	2.27	111.3	2.44	111.9	2.81	112.1	3.17
		1.5	98.2	3.08	103.1	3.08	105.7	3.08	108.8	3.08	109.9	3.19	110.8	3.36	111.5	3.73	111.9	4.09
		2.0	94.2	4.00	100.4	4.00	103.7	4.00	107.7	4.00	109.2	4.11	110.2	4.28	111.2	4.65	111.6	5.02
		2.5	90.4	4.92	97.8	4.92	101.8	4.92	106.6	4.92	108.4	5.03	109.7	5.20	110.8	5.57	111.4	5.94
		3.0	86.6	5.84	95.3	5.84	100.0	5.84	105.6	5.84	107.7	5.96	109.2	6.12	110.5	6.49	111.2	6.86
		3.5			92.9	6.76	98.2	6.76	104.6	6.76	107.0	6.88	108.7	7.05	110.2	7.41	110.9	7.78
		4.0			90.5	7.69	96.5	7.69	103.6	7.69	106.3	7.80	108.2	7.97	109.9	8.34	110.7	8.70
1450	40-38	0.5	27.8	0.37	29.0	0.37	29.7	0.37	30.4	0.37	30.7	0.41	31.0	0.47	31.1	0.60	31.2	0.73
		1.0	24.8	0.62	27.0	0.62	28.2	0.62	29.6	0.62	30.2	0.66	30.5	0.72	30.9	0.85	31.0	0.98
		1.5	22.1	0.88	25.2	0.88	26.9	0.88	28.9	0.88	29.6	0.92	30.2	0.98	30.7	1.11	30.9	1.24
		2.0	19.5	1.14	23.5	1.14	25.6	1.14	28.2	1.14	29.1	1.18	29.8	1.24	30.4	1.37	30.7	1.50
		2.5	16.9	1.40	21.8	1.40	24.4	1.40	27.5	1.40	28.6	1.44	29.5	1.50	30.2	1.63	30.6	1.76
		3.0	14.5	1.65	20.2	1.65	23.2	1.65	26.8	1.65	28.2	1.69	29.1	1.75	30.0	1.88	30.4	2.01
		3.5	12.1	1.91	18.6	1.91	22.1	1.91	26.2	1.91	27.7	1.95	28.8	2.01	29.8	2.14	30.3	2.27
		4.0	9.8	2.17	17.0	2.17	20.9	2.17	25.5	2.17	27.3	2.21	28.5	2.27	29.6	2.40	30.1	2.53
	40-46	0.5	37.4	0.45	38.9	0.45	39.7	0.45	40.7	0.45	41.1	0.49	41.3	0.55	41.6	0.68	41.7	0.81
		1.0	33.8	0.80	36.5	0.80	38.0	0.80	39.7	0.80	40.4	0.84	40.8	0.90	41.3	1.03	41.5	1.16
		1.5	30.4	1.14	34.2	1.14	36.3	1.14	38.8	1.14	39.7	1.18	40.4	1.24	41.0	1.37	41.2	1.50
		2.0	27.2	1.48	32.1	1.48	34.8	1.48	37.9	1.48	39.1	1.52	39.9	1.58	40.7	1.71	41.1	1.84
		2.5	24.1	1.83	30.0	1.83	33.3	1.83	37.1	1.83	38.5	1.87	39.5	1.93	40.4	2.06	40.9	2.19
		3.0	21.1	2.17	28.0	2.17	31.8	2.17	36.3	2.17	37.9	2.21	39.1	2.27	40.2	2.40	40.7	2.53
		3.5			26.1	2.51	30.4	2.51	35.5	2.51	37.4	2.55	38.7	2.61	39.9	2.74	40.5	2.87
		4.0			24.2	2.86	29.0	2.86	34.7	2.86	36.8	2.90	38.3	2.96	39.7	3.09	40.3	3.22
	40-54	0.5	50.7	0.57	52.5	0.57	53.6	0.57	54.8	0.57	55.3	0.61	55.6	0.67	55.9	0.80	56.0	0.93
		1.0	46.1	1.03	49.5	1.03	51.3	1.03	53.5	1.03	54.4	1.07	54.9	1.13	55.5	1.26	55.7	1.39
		1.5	41.8	1.49	46.7	1.49	49.3	1.49	52.4	1.49	53.5	1.53	54.4	1.59	55.1	1.72	55.5	1.85
		2.0	37.8	1.95	44.0	1.95	47.3	1.95	51.3	1.95	52.8	1.99	53.3	2.05	54.8	2.18	55.2	2.31
		2.5			41.4	2.41	45.4	2.41	50.2	2.41	52.0	2.45	53.5	2.51	54.4	2.64	55.0	2.77
		3.0			38.9	2.88	43.6	2.88	49.2	2.88	51.3	2.92	52.8	2.98	54.1	3.11	54.8	3.24
		3.5						3.34	48.2	3.34	50.6	3.38	52.3	3.44	53.8	3.57	54.5	3.70
		4.0						3.80	47.2	3.80	49.9	3.84	51.8	3.90	53.5	4.03	54.3	4.16

△灰色为不推荐区 The area of this color is not recommend able.

SPF40 规格性能参数表 Performance tabe Data for Size 40

转速 转/分 speed r/min	泵规格 pump size	压力 兆帕 Delivery pressure MPa	运动粘度 mm²/s 或恩氏粘度(° E)Kinematic viscosity mm²/s(° E)															
			3 (1.2)		6 (1.5)		12 (2)		40 (5)		75 (10)		150 (20)		380 (50)		750 (100)	
			流量 Q 升/分 L/min	轴功率 P 升瓦 KW	流量 Q 升/分 L/min	轴功率 P 升瓦 KW	流量 Q 升/分 L/min	轴功率 P 升瓦 KW	流量 Q 升/分 L/min	轴功率 P 升瓦 KW	流量 Q 升/分 L/min	轴功率 P 升瓦 KW	流量 Q 升/分 L/min	轴功率 P 升瓦 KW	流量 Q 升/分 L/min	轴功率 P 升瓦 KW	流量 Q 升/分 L/min	轴功率 P 升瓦 KW
950	40-38	0.5	16.9	0.23	18.1	0.23	18.8	0.23	19.6	0.23	19.9	0.25	20.1	0.28	20.3	0.35	20.4	0.42
		1.0	13.9	0.40	16.2	0.40	17.4	0.40	18.8	0.40	19.3	0.42	19.7	0.45	20.0	0.52	20.2	0.59
		1.5	11.2	0.56	14.3	0.56	16.0	0.56	18.0	0.56	18.8	0.59	19.3	0.62	19.8	0.69	20.0	0.76
		2.0	8.6	0.73	12.6	0.73	14.8	0.73	17.3	0.73	18.3	0.75	19.0	0.79	19.6	0.85	19.9	0.92
		2.5	6.1	0.90	10.9	0.90	13.5	0.90	16.6	0.90	17.8	0.92	18.6	0.95	19.4	1.02	19.7	1.09
		3.0			9.3	1.07	12.3	1.07	16.0	1.07	17.3	1.09	18.3	1.12	19.1	1.19	19.5	1.26
		3.5			7.7	1.24	11.2	1.24	15.3	1.24	16.9	1.26	18.0	1.29	18.9	1.36	19.4	1.43
		4.0			6.2	1.41	10.1	1.41	14.7	1.41	16.4	1.43	17.6	1.46	18.7	1.53	19.3	1.60
	40-46	0.5	22.9	0.28	24.4	0.28	25.3	0.28	26.2	0.28	26.6	0.30	26.9	0.34	27.1	0.41	27.2	0.47
		1.0	19.3	0.51	22.0	0.51	23.5	0.51	25.2	0.51	25.9	0.53	26.4	0.56	26.8	0.63	27.0	0.70
		1.5	15.9	0.73	19.8	0.73	21.8	0.73	24.3	0.73	25.2	0.75	25.9	0.79	26.5	0.85	26.8	0.92
		2.0	12.7	0.96	17.6	0.96	20.3	0.96	23.4	0.96	24.6	0.98	25.5	1.01	26.2	1.08	26.6	1.15
		2.5			15.6	1.18	18.8	1.18	22.6	1.18	24.0	1.20	25.0	1.24	25.9	1.30	26.4	1.37
		3.0			13.6	1.41	17.3	1.41	21.8	1.41	23.5	1.43	24.6	1.46	25.7	1.53	26.2	1.60
		3.5					15.9	1.63	21.0	1.63	22.9	1.65	24.2	1.69	25.4	1.75	26.0	1.82
		4.0					14.5	1.86	20.2	1.86	22.3	1.88	23.8	1.91	25.2	1.98	25.8	2.05
	40-54	0.5	31.2	0.36	33.1	0.36	34.1	0.36	35.3	0.36	35.8	0.38	36.1	0.41	36.4	0.48	36.6	0.55
		1.0	26.6	0.66	30.0	0.66	31.9	0.66	34.1	0.66	34.9	0.68	35.5	0.72	36.0	0.78	36.3	0.85
		1.5	22.4	0.96	27.2	0.96	29.8	0.96	32.9	0.96	34.1	0.99	34.9	1.02	35.7	1.09	36.0	1.16
		2.0	18.4	1.27	24.5	1.27	27.9	1.27	31.8	1.27	33.3	1.29	34.4	1.32	35.3	1.39	35.8	1.46
		2.5					26.0	1.57	30.8	1.57	32.6	1.59	33.8	1.62	35.0	1.59	35.5	1.76
		3.0					24.2	1.87	29.8	1.87	31.8	1.89	33.3	1.92	34.7	1.99	35.3	2.06
		3.5							28.8		31.1	2.19	32.8	2.23	34.4	2.29	35.1	2.36
		4.0							27.8		30.4	2.50	32.3	2.53	34.0	2.60	34.9	2.67
3400	40-38	0.5	70.1	1.00	71.4	1.00	72.0	1.00	72.8	1.00	73.1	1.14	73.3	1.36	73.5	1.82	73.6	2.29
		1.0	67.2	1.60	69.4	1.60	70.6	1.60	72.0	1.60	72.5	1.75	72.9	1.96	73.2	2.43	73.4	2.89
		1.5	64.4	2.21	67.6	2.21	69.2	2.21	71.2	2.21	72.0	2.35	72.5	2.56	73.0	3.03	73.2	3.50
		2.0	61.8	2.81	65.8	2.81	68.0	2.81	70.5	2.81	71.5	2.95	72.2	3.17	72.8	3.64	73.1	4.10
		2.5	59.3	3.41	64.1	3.41	66.8	3.41	69.9	3.41	71.0	3.56	71.8	3.77	72.6	4.24	72.9	4.71
		3.0	56.9	4.02	62.5	4.02	65.6	4.02	69.2	4.02	70.5	4.16	71.5	4.38	72.4	4.84	72.8	5.31
		3.5	54.5	4.62	60.9	4.62	64.4	4.62	68.5	4.62	70.1	4.76	71.2	4.98	72.2	5.45	72.6	5.91
		4.0	52.2	5.22	59.4	5.22	63.3	5.22	67.9	5.22	69.6	5.37	70.9	5.58	72.0	6.05	72.5	6.52
	40-46	0.5	93.9	1.20	95.4	1.20	96.2	1.20	97.2	1.20	97.6	1.34	97.8	1.56	98.0	2.03	98.2	2.49
		1.0	90.2	2.00	93.0	2.00	94.4	2.00	96.2	2.00	96.9	2.15	97.3	2.36	97.7	2.83	97.9	3.30
		1.5	86.9	2.81	90.7	2.81	92.8	2.81	95.3	2.81	96.2	2.95	96.9	3.17	97.4	3.64	97.7	4.10
		2.0	83.7	3.61	88.6	3.61	91.2	3.61	94.4	3.61	95.6	3.76	96.4	3.97	97.2	4.44	97.5	4.91
		2.5	80.6	4.42	86.5	4.42	89.7	4.42	93.6	4.42	95.0	4.56	96.0	4.78	96.9	5.25	97.3	5.71
		3.0	77.6	5.22	84.5	5.22	88.3	5.22	92.7	5.22	94.4	5.37	95.6	5.58	96.7	6.05	97.2	6.52
		3.5	74.7	6.03	82.6	6.03	86.9	6.03	91.9	6.03	93.9	6.17	95.2	6.39	96.4	6.85	97.0	7.32
		4.0	71.8	6.83	80.7	6.83	85.5	6.83	91.2	6.83	93.3	6.98	94.8	7.19	96.2	7.66	96.8	8.13
	40-54	0.5	126.5	1.48	128.4	1.48	129.4	1.48	130.6	1.48	131.1	1.62	131.4	1.83	131.7	2.30	131.9	2.77
		1.0	121.9	2.56	125.3	2.56	127.2	2.56	129.4	2.56	130.2	2.70	130.8	2.92	131.3	3.38	131.6	3.85
		1.5	117.7	3.64	122.5	3.64	125.1	3.64	128.2	3.64	129.4	3.78	130.2	4.00	131.0	4.46	131.3	4.93
		2.0	113.7	4.72	119.8	4.72	123.2	4.72	127.1	4.72	128.6	4.86	129.7	5.08	130.6	5.54	131.1	6.01
		2.5	109.8	5.80	117.3	5.80	121.3	5.80	126.1	5.80	127.9	5.94	129.1	6.16	130.3	6.62	130.8	7.09
		3.0	106.0	6.88	114.7	6.88	119.5	6.88	125.1	6.88	127.1	7.02	128.6	7.24	130.0	7.71	130.6	8.17
		3.5			112.3	7.96	117.7	7.96	124.1	7.96	126.4	8.10	128.1	8.32	129.7	8.79	130.4	9.25
		4.0			109.9	9.04	115.9	9.04	123.1	9.04	125.7	9.18	127.6	9.40	129.3	9.87	130.2	10.33

△灰色为不推荐区 The area of this color is not recommend able.

SPF40 规格性能参数表 Performance tabe Data for Size40

转速 转/分 speed r/min	泵规格 pump size	压力 兆帕 Delivery pressure MPa	运动粘度 mm²/s 或恩氏粘度(° E)Kinematic viscosity mm²/s(° E)															
			3 (1.2)		6 (1.5)		12 (2)		40 (5)		75 (10)		150 (20)		380 (50)		750 (100)	
			流量 Q 升/分 L/min	轴功率 P 升瓦 KW	流量 Q 升/分 L/min	轴功率 P 升瓦 KW	流量 Q 升/分 L/min	轴功率 P 升瓦 KW	流量 Q 升/分 L/min	轴功率 P 升瓦 KW	流量 Q 升/分 L/min	轴功率 P 升瓦 KW	流量 Q 升/分 L/min	轴功率 P 升瓦 KW	流量 Q 升/分 L/min	轴功率 P 升瓦 KW	流量 Q 升/分 L/min	轴功率 P 升瓦 KW
1750	40-38	0.5	34.1	0.45	35.3	0.45	36.0	0.45	36.7	0.45	37.0	0.51	37.3	0.58	37.4	0.76	37.5	0.93
		1.0	31.1	0.76	33.3	0.76	34.5	0.76	35.9	0.76	36.5	0.81	36.8	0.89	37.2	1.06	37.3	1.24
		1.5	28.4	1.07	31.5	1.07	33.2	1.07	35.2	1.07	35.9	1.12	36.5	1.20	37.0	1.37	37.2	1.54
		2.0	25.8	1.38	29.8	1.38	31.9	1.38	34.5	1.38	35.4	1.43	36.1	1.51	36.7	1.68	37.0	1.85
		2.5	23.2	1.69	28.1	1.69	30.7	1.69	33.8	1.69	34.9	1.74	35.8	1.82	36.5	1.99	36.9	2.16
		3.0	20.8	2.00	26.5	2.00	29.5	2.00	33.1	2.00	34.5	2.05	35.4	2.13	36.3	2.30	36.7	2.47
		3.5	18.4	2.31	24.9	2.31	28.4	2.31	32.5	2.31	34.0	2.36	35.1	2.44	36.1	2.61	36.6	2.78
		4.0	16.1	2.62	23.3	2.62	27.2	2.62	31.8	2.62	33.6	2.67	34.8	2.75	35.9	2.92	36.4	3.09
	40-46	0.5	45.8	0.56	47.3	0.56	48.1	0.56	49.1	0.56	49.5	0.61	49.7	0.69	50.0	0.86	50.1	1.03
		1.0	42.2	0.97	44.9	0.97	46.4	0.94	48.1	0.97	48.8	1.02	49.2	1.10	49.7	1.27	49.9	1.44
		1.5	38.8	1.38	42.6	1.38	44.7	1.38	47.2	1.38	48.1	1.43	48.8	1.51	49.4	1.68	49.6	1.85
		2.0	35.6	1.79	40.5	1.79	43.2	1.79	46.3	1.79	47.5	1.84	48.3	1.92	49.1	2.09	49.5	2.27
		2.5	32.5	2.20	38.4	2.20	41.7	2.20	45.5	2.20	46.9	2.26	47.9	2.34	48.8	2.51	49.3	2.68
		3.0	29.5	2.62	36.4	2.62	40.2	2.62	44.7	2.62	46.3	2.67	47.5	2.75	48.6	2.92	49.1	3.09
		3.5			34.5	3.03	38.8	3.03	43.9	3.03	45.8	3.08	47.1	3.16	48.3	3.33	48.9	3.50
		4.0			32.6	3.44	37.4	3.44	43.1	3.44	45.2	3.49	46.7	3.57	48.1	3.74	48.7	3.91
	40-54	0.5	61.9	0.70	63.8	0.70	64.9	0.70	66.1	0.70	66.5	0.75	66.9	0.83	67.1	1.00	67.3	1.17
		1.0	57.4	1.25	60.8	1.25	62.6	1.25	64.8	1.25	65.6	1.30	66.2	1.38	66.8	1.55	67.0	1.72
		1.5	53.1	1.80	58.0	1.80	60.6	1.80	63.7	1.80	64.8	1.86	65.6	1.94	66.4	2.11	66.7	2.28
		2.0	49.1	2.36	55.3	2.36	58.6	2.36	62.6	2.36	64.0	2.41	65.1	2.49	66.0	2.66	66.5	2.83
		2.5			52.7	2.91	56.7	2.91	61.5	2.91	63.3	2.96	64.6	3.04	65.7	3.21	66.3	3.38
		3.0			50.2	3.46	54.9	3.46	60.5	3.46	62.6	3.52	64.0	3.59	65.4	3.77	66.0	3.94
		3.5							59.5	4.02	61.9	4.07	63.5	4.15	65.1	4.32	65.8	4.49
		4.0							58.5	4.57	61.2	4.62	63.1	4.70	64.8	4.87	65.6	5.04
1140	40-38	0.5	21.0	0.28	22.3	0.28	22.9	0.28	23.7	0.28	24.0	0.31	24.2	0.35	24.4	0.44	24.5	0.53
		1.0	18.1	0.48	20.3	0.48	21.5	0.48	22.9	0.48	23.4	0.51	23.8	0.55	24.2	0.64	24.3	0.73
		1.5	15.3	0.68	18.5	0.68	20.1	0.68	22.2	0.68	22.9	0.71	23.4	0.75	23.9	0.84	24.1	0.93
		2.0	12.7	0.89	16.7	0.89	18.9	0.89	21.4	0.89	22.4	0.91	23.1	0.96	23.7	1.05	24.0	1.14
		2.5	10.2	1.09	15.0	1.09	17.7	1.09	20.6	1.09	21.9	1.12	22.7	1.16	23.5	1.25	23.8	1.34
		3.0	7.8	1.29	13.4	1.29	16.5	1.29	20.1	1.29	21.4	1.32	22.4	1.36	23.3	1.45	23.7	1.54
		3.5	5.4	1.49	11.8	1.49	15.3	1.49	19.4	1.49	21.0	1.52	22.1	1.56	23.1	1.65	23.5	1.74
		4.0			10.3	1.70	14.2	1.70	18.8	1.70	20.5	1.72	21.8	1.77	22.9	1.86	23.4	1.95
	40-46	0.5	28.4	0.35	29.9	0.35	30.8	0.35	31.7	0.35	32.1	0.37	32.4	0.42	32.6	0.51	32.7	0.60
		1.0	24.8	0.62	27.5	0.62	29.0	0.62	30.7	0.62	31.4	0.64	31.9	0.59	32.3	0.78	32.5	0.87
		1.5	21.4	0.89	25.3	0.89	27.3	0.89	29.8	0.89	30.7	0.91	31.4	0.96	32.0	1.05	32.3	1.14
		2.0	18.2	1.16	23.1	1.16	25.8	1.16	28.9	1.16	30.1	1.18	31.0	1.23	31.7	1.32	32.1	1.41
		2.5	15.1	1.43	21.1	1.43	24.3	1.43	28.1	1.43	29.5	1.45	30.5	1.50	31.5	1.59	31.9	1.68
		3.0	12.1	1.70	19.1	1.70	22.8	1.70	27.3	1.70	29.0	1.72	30.1	1.77	31.2	1.86	31.7	1.95
		3.5					21.4	1.97	26.5	1.97	28.4	1.99	29.7	2.04	30.9	2.13	31.5	2.22
		4.0					20.0	2.24	25.7	2.24	27.8	2.26	29.3	2.31	30.7	2.40	31.4	2.49
	40-54	0.5	38.6	0.44	40.5	0.44	41.5	0.44	42.7	0.44	43.2	0.47	43.5	0.51	43.8	0.60	43.9	0.69
		1.0	34.0	0.80	37.4	0.80	39.3	0.80	41.5	0.80	42.3	0.83	42.9	0.87	43.4	0.96	43.7	1.05
		1.5	29.8	1.16	34.6	1.16	37.2	1.16	40.3	1.16	41.5	1.19	42.3	1.23	43.1	1.32	43.4	1.41
		2.0	25.8	1.53	31.9	1.53	35.3	1.53	39.2	1.53	40.7	1.55	41.8	1.60	42.7	1.69	43.2	1.78
		2.5					33.4	1.89	38.2	1.89	40.0	1.92	41.2	1.96	42.4	2.05	42.9	2.14
		3.0					31.6	2.25	37.1	2.25	39.2	2.28	40.7	2.32	42.1	2.41	42.7	2.50
		3.5							36.1	2.61	38.5	2.64	40.2	2.68	41.7	2.77	42.5	2.86
		4.0							35.2	2.98	37.8	3.00	39.7	3.05	41.4	3.14	42.3	3.23

△灰色为不推荐区 The area of this color is not recommend able.

必需气蚀余量(NPSHr):下面给出的数值用于输送不含气体的介质。不带滤器的泵,并不要求许用安全值。当使用带滤器的泵时,表中给出的 NPSH 值应增加 0.5 米。

NPSH rep.(m)The values as indicated apply to pumps without filter for air-free delivery media. A safety allovance is not required. when using pumps with filter. the indicated NPSH values are inceased by 0.5m

pump size 泵规格	转速 Speed r/min																			
	950/1140					1450/1740					2900					3400				
	运动粘度 Kinematic viscosity mm²/s(° E)																			
	3-40 (1.2-5)	75 (10)	150 (20)	380 (50)	750 (100)	3-40 (1.2-5)	75 (10)	150 (20)	380 (50)	750 (100)	3-40 (1.2-5)	75 (10)	150 (20)	380 (50)	750 (100)	3-40 (1.2-5)	75 (10)	150 (20)	380 (50)	750 (100)
	必带汽蚀余量 NPSHr m(理想工况下)																			
20-38	2.5	2.8	2.9	3.0	3.2	2.5	2.8	2.9	3.1	3.3	2.5	3.0	3.2	3.5	3.8	2.6	3.1	3.4	3.7	4.0
20-46	2.5	2.8	2.9	3.1	3.3	2.5	2.9	3.1	3.3	3.5	2.7	3.2	3.5	3.9	4.2	2.9	3.4	3.8	4.1	4.5
20-56	2.5	2.9	3.0	3.3	3.5	2.5	3.1	3.3	3.6	3.9	3.2	3.8	4.1	4.5	4.9	3.5	4.1	4.5	5.0	5.5
40-38	2.5	2.8	2.9	3.1	3.3	2.5	2.9	3.1	3.3	3.5	3.7	3.2	3.5	3.8	4.1	2.8	3.4	3.7	4.0	4.4
40-46	2.5	2.8	3.0	3.2	3.4	2.6	3.0	3.3	3.5	3.8	3.0	3.6	4.0	4.3	4.7	3.3	4.0	4.3	4.7	5.2
40-54	2.5	3.0	3.2	3.4	3.6	2.7	3.3	3.6	3.9	4.2	3.6	4.3	4.7	5.1	5.6	4.1	4.8	5.3	5.8	6.4

泵的尺寸 不带过滤器的 SPF 型 Pump dimensions SPF without filter

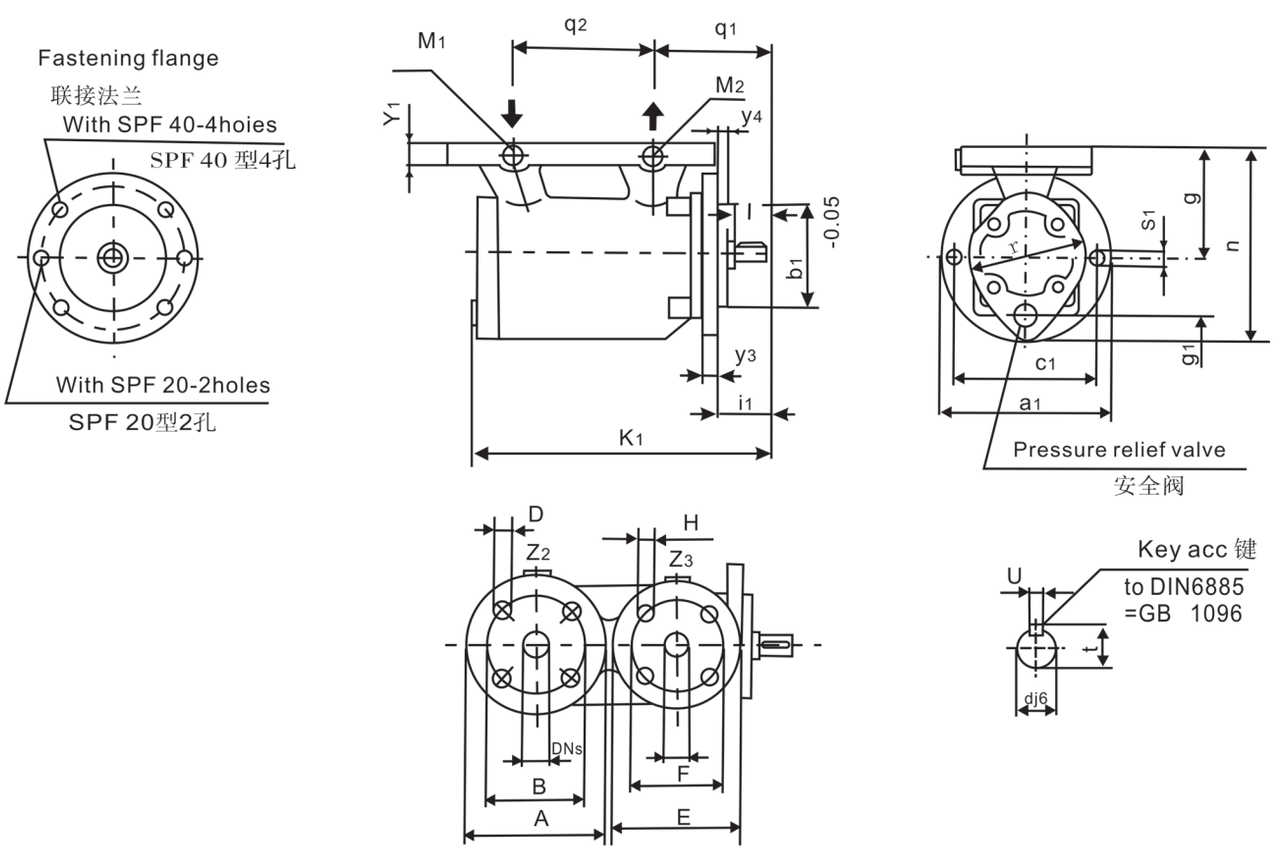

旋转方向:从轴端看为顺时针

Sense of rotation: clockwise, as seen from the driving side

尺寸 (mm)Dimensions(mm)

size 规格	泵尺寸 Pump dimensions															轴伸 Staft end		
	a_1	b_1	c_1	g	g_1	i_1	k_1	n	q_1	q_2	r	s_1	y_3	y_4	d	l	t	u
20	175	101.6	146	95	56	53	280	177	130	125	110	14	15	10	19	40	21.5	6
40	180	120.1	150	110	60	42	308	196	125	135	115	14	16	5	19	35	21.5	6

size 规格	安装尺寸 Assembly dimensions												Pressure qage 压力表 M_1/M_2
	进口 Suction side②						出口 Delivery side③						
	Dns	A	B	D	y_1	z_2	DNd	E	F	H	y_1	z_3	
20	25	120	85	14	18	4	25	120	85	14	18	4	G1/4
40	32	140	100	18	18	4	25	120	85	14	18	4	G1/4

注:①配合 Fith ②DIN2533=GB 2555 PN16 ③DIN2535=GB 2555. PN40

不带过滤器的 SPF 型机组安装尺寸
Unit dimensions
SPF without filter
规格:20 和 40
sizes :20and40

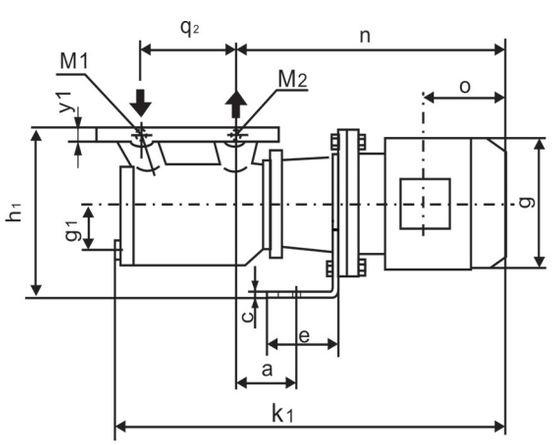

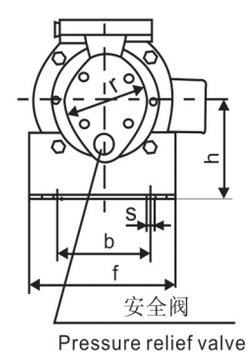

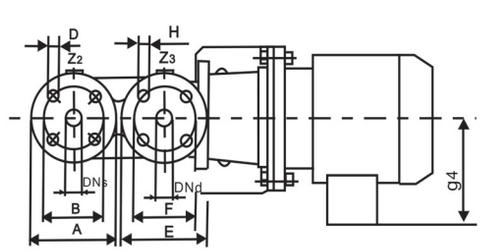

规格 40 型泵底脚,其余尺寸同上

Foot mounting of size 40

Arrangement of other unit dimensions as above

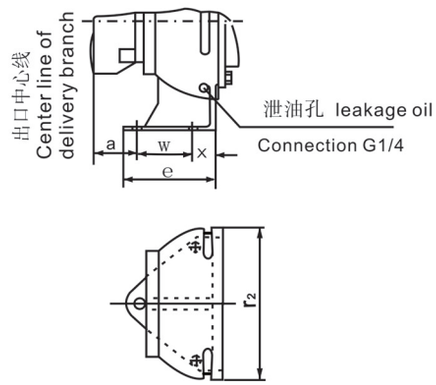

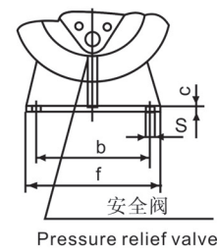

旋转方向:从轴端看为顺时针

Sense of rotation: clockwise, as seen from the driving side

尺寸(mm) Dimensions(mm)

Pump size 规格	motor size 电机规格	unit dimerisions 机组尺寸																			安装尺寸 Assembly dimensions 进口 Suction side①出口 Delivery side②										Pressure gauges 压力表 M_1/M_2
		a	b	c	e	f	g	g_1	g_4	h	h_1	k_1	n	o	q_2	r_1	r_2	s	w	x	y_1	DNs	A	B	D	Z_2	DNd	DNd	E	F	H	Z_3
20	90S 90L 100L 112M 132S	121 121 147 147 157	160 160 200 200 250	8 10	100 100 100 100 120	200 200 250 250 300	186 186 200 224 220	56	136 136 140 152 165	140 140 160 160 170	235 235 255 255 265	572 597 666 687 738	422 447 514 535 588	130 142 169 183 195	125	110	–	14	50 50 50 50 60	–	18	25	120	85	14	4	25	120	85	14	4	G1/4
40	90L 100L 112M 132S 132M 160M	53	180	13 15 23	147	210 250	186 200 224 220 260 260	60	136 140 152 165 181 181	170 180 200	280 290 310	634 675.5 696.5 750.5 807.5 869	448.5 490 511 565 622 686	142 169 183 195 233 233	135	115	250 250 250 300 300 350	14	100	30 50	18	32	140	100	18	4	25	120	85	14	4	G1/4

注:①DIN2553=GB 2555 , PN16　②DIN2553=GB 2555 , PN40

泵的尺寸 Pump dimensions SPF 20 带有过滤器型 SPF 20 with filter

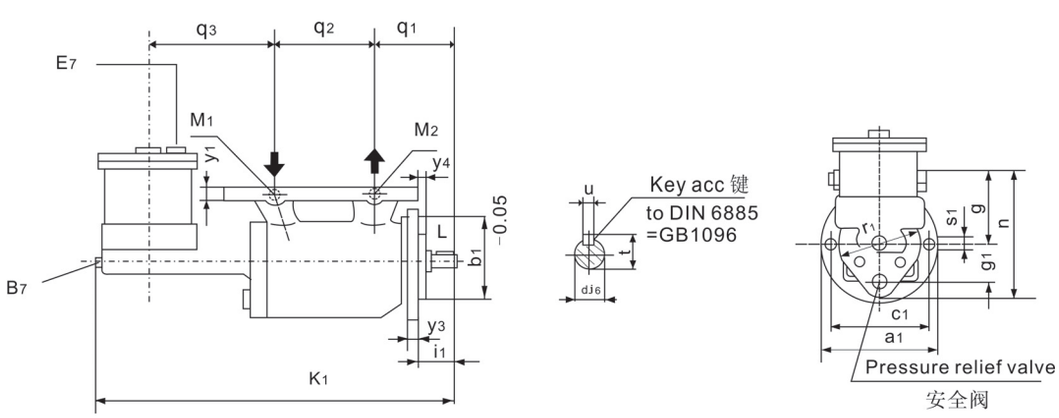

旋转方向:从轴端看为顺时针

尺寸(mm) Dimensions (mm)

Sense of rotation: clockwise, as seen from the driving side

Size 规格	泵的尺寸 Pup dimensions																轴伸 Shaft edn		
	a_1	b_1	e_1	g	g_1	i_1	k_1	n	q_1	q_2	q_3	r	s_1	y_3	y_4	d	l	t	u
20	175	101.60	146	95	56	53	468	175	130	125	144	110	14	15	10	19	40	21.5	6

机组安装图 unit dimension 带有滤器的 SPF20 型 SPF 20 With filer

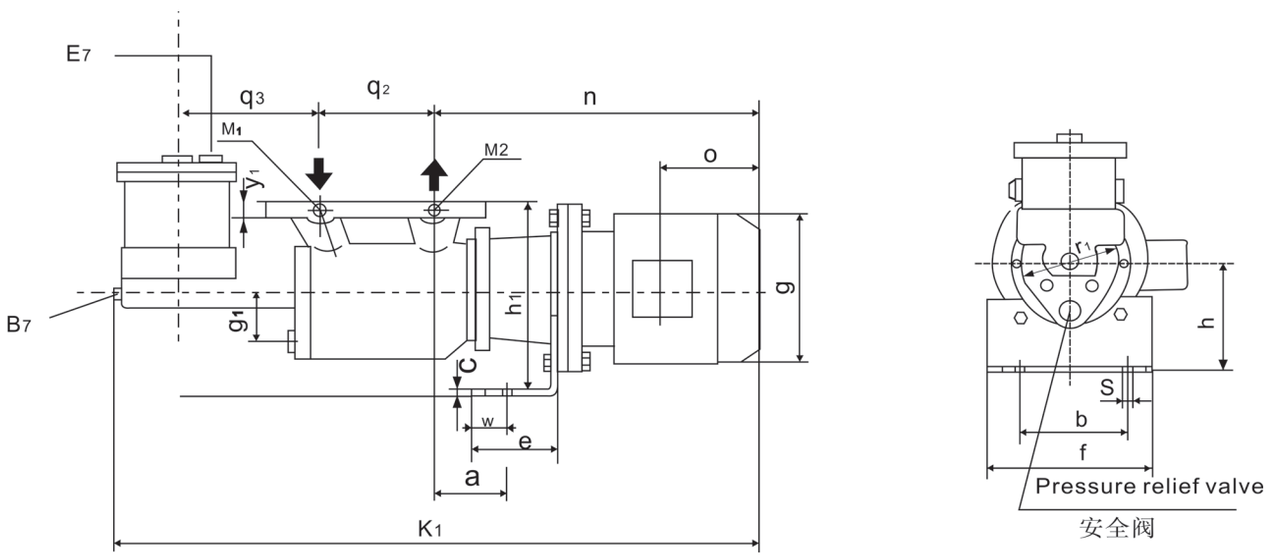

尺寸 (mm) Dimensions (mm)

Pumpsize 泵规格	Motou size 电机规格	a	b	c	e	f	g	g_1	g_4	h	h_1	k_1	n	o	q_2	q_3	r_1	s	w	y_1
20	90S 90L 100L 112M 132S	121 121 147 147 157	160 160 200 200 250	8 10	100 100 100 100 120	200 200 250 250 300	186 186 200 224 220	56	136 136 140 152 165	140 140 160 160 170	235 235 255 255 265	760 785 852 873 926	422 447 514 535 588	130 142 169 183 195	125	144	110	14	50 50 50 50 60	18

Pumpsize 泵规格	安装尺寸 Assembly dimensions										Drainking 排液孔 B7	vention 排气孔 E7	Pressure gauge 压力表 M_1/M_2
	进口 Suction side①					出口 Delivery side③							
	DNs	a	b	d	z_2	DNd	E	F	h	z_3			
20	25	120	85	14	4	25	120	85	14	4	G1/2	G1/4	G1/4

注:①DIN2553=GB 2555 , PN16 ②DIN2535=GB 2555 , PN40